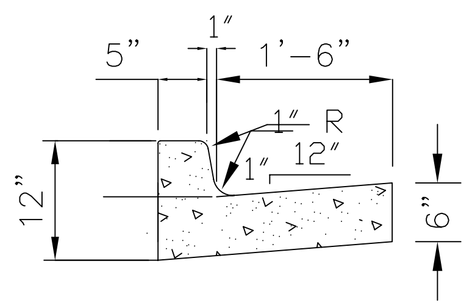

NOTE: GUTTER SLOPE MAY VARY FROM NORMAL MAX. SHOWN TO FLAT OR PITCHED BASED ON CONTRACTOR'S APPROVED DRAINAGE PLAN

1 / C1C1 NORMAL GUTTER SECTION

SCALE: 1"=1'

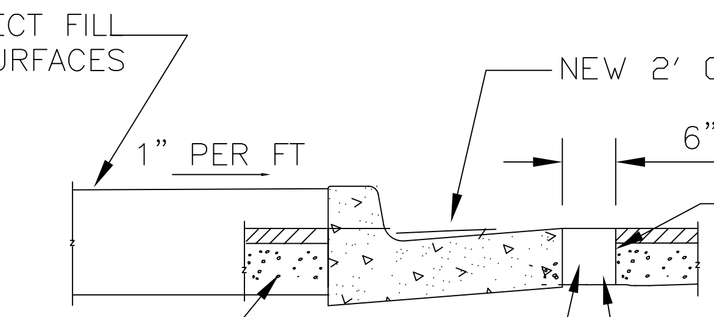

2 / C1C1 ISLAND CONSTRUCTION DETAIL

SCALE: NONE

100 LF NEW 4" DOUBLE SOLID YELLOW THERMOPLASTIC LINE

BID 146 SF (TOTAL FOR 50 LOCATIONS) NEW 2' WIDE SOLID WHITE THERMOPLASTIC STOP BAR. LENGTH MAY VARY AT EACH LOCATION

BID 85 LF NEW 2'-0" CONC. C&G AND 49 SYDS OF BACKFILL AND SOD (TYP. EACH ISLAND)

31.2 LF NEW 4" DOUBLE SOLID YELLOW THERMOPLASTIC LINE

CENTER ISLAND BETWN TWO ROWS OF PARKING STALLS AS SHOWN. FACE OF NEW C&G TO MATCH LOCATION OF STALL LINE. (TYP. EACH ISLAND)

PAVEMENT DEMOLITION LIMITS BID 660 SF MIN. FULL DEPTH PAVEMENT DEPTH (TYP. FOR EACH ISLAND)

24.5 LF NEW 4" DOUBLE SOLID YELLOW THERMOPLASTIC LINE

NEW 30"x30" R1-1 "STOP" SIGN AND POST (TYP. OF 5 LOCATIONS) SET BOTTOM OF SIGN 7 FEET ABOVE TOP OF CURB. OFFSET SIGN POST 4 FEET FROM FACE OF CURB.

50 LF NEW 4" DOUBLE SOLID YELLOW THERMOPLASTIC LINE

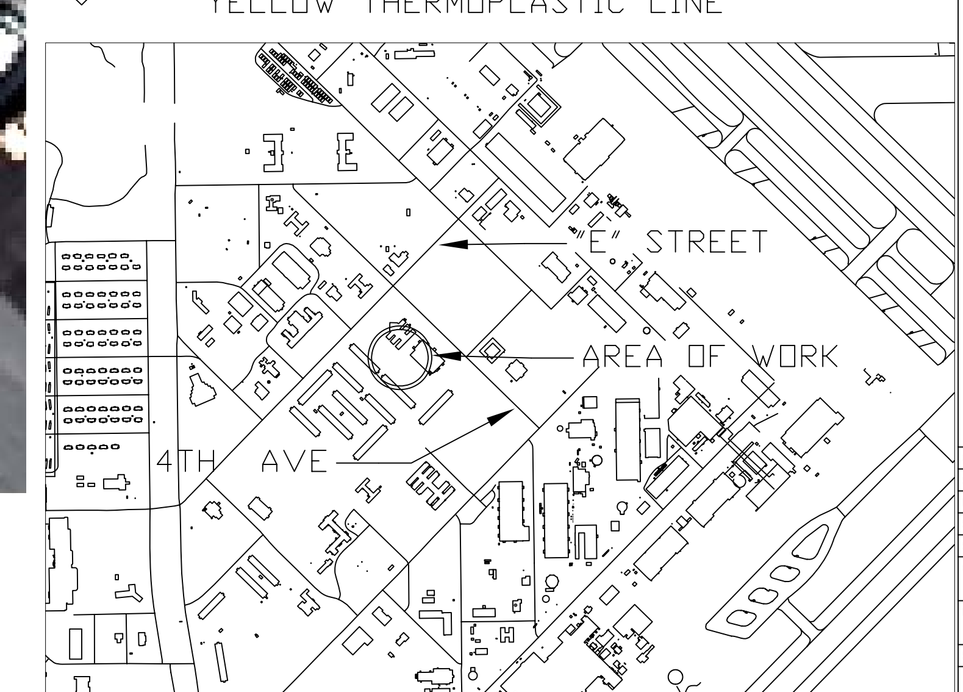

GRAPHIC SCALE

10' 5' 0 10' 20' 30' 40' 50'

SCALE: 1" = 20'

3 / C1C1 SITE PLAN

SCALE: 1"=20'

							APPR
							DATE
							DESCRIPTION
							SYM.

DESIGNED & ENGINEERED BY: FACILITIES ENGINEERING CIVIL DIVISION

A/E'S USE THIS SPACE FOR YOUR ADDRESS INFO.

SEAL

APPROVED

ACTIVITY – SATISFACTORY TO

DATE

APPROVED

FOR EFD FOR COMMANDER NAVFAC

DATE

A/E		EFD
	DESIGN	WDM
	DRAWN	WDM
	REVIEW	
	QC	
	CHIEF ARCH./ ENGR.	
	PROJECT MANAGER	WDM
	FIRE PROTECTION	
	BRANCH MANAGER	PGF
	DESIGN DIRECTOR	JFF

DEPARTMENT OF THE NAVY
NAVAL FACILITIES ENGINEERING COMMAND
MARINE CORPS AIR STATION, CHERRY POINT, N.C.

INSTALL ISLANDS, SIGNS, MARKINGS
BEHIND MESS HALL, BLDG 3451

SITE PLAN AND DETAILS

CODE ID. NO. 80091 | SIZE D

SCALE: AS SHOWN

FED NO.

STA. PROJ. NO. W04656875

SPEC. NO. 46568875

CONSTR. CONTR. NO.

NAVFAC DRAWING NO. SK46568875-1

SHEET 1 OF 1

C-1

DRAWFORM REVISION AUGUST 2002